Gardena Accu bladblazer PowerJet 18V P4A G14890

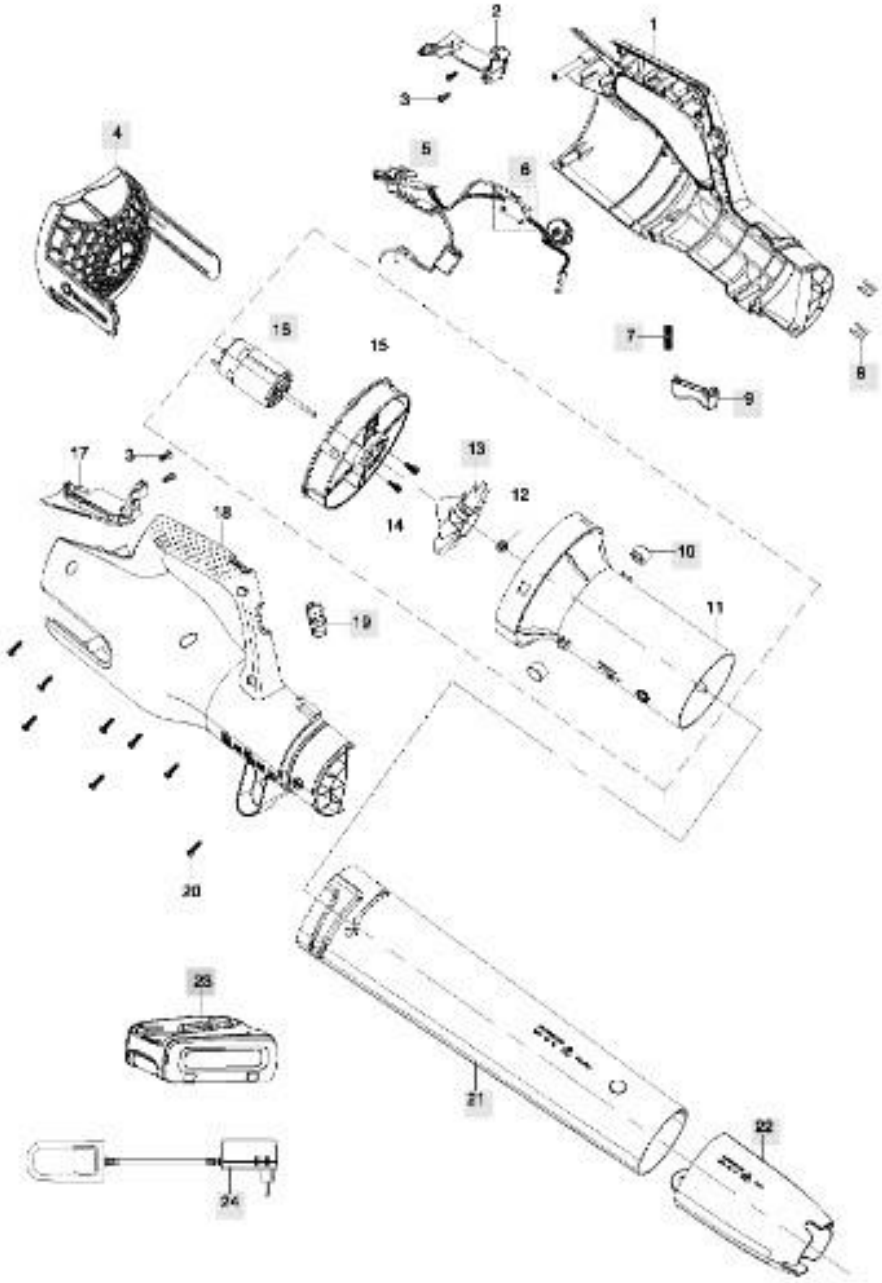

Gardena Accu bladblazer PowerJet 18V P4A set		
POSITIE	BESTELNR.	OMSCHRIJVING
4	14890-00.600.03	Venster
5	14890-00.620.00	Control systeem
6	14890-00.600.09	Schakelaar
7	9860-0.600.21	Veer
8	14890-00.600.12	Klem
9	9860-00.600.08	Trekker
10	14890-00.610.05	Stootbuffer
13	14890-00.610.03	Ventilator
16	14890-00.610.04	Motor
19	14700-00.600.01	Led-display
21	14890-00.600.01	Pijp
22	14890-00.600.07	Mondstuk
23	14903-00.600.00	Batterij PBA 18V/45 P4A (G14903)
23	14905-00.600.00	Batterij PBA 18V/72 P4A (G14905)
24	14900-00.600.00	Oplader (G14900)